ROBOTIC ARM USING ESP32 AND SERVO MOTORS

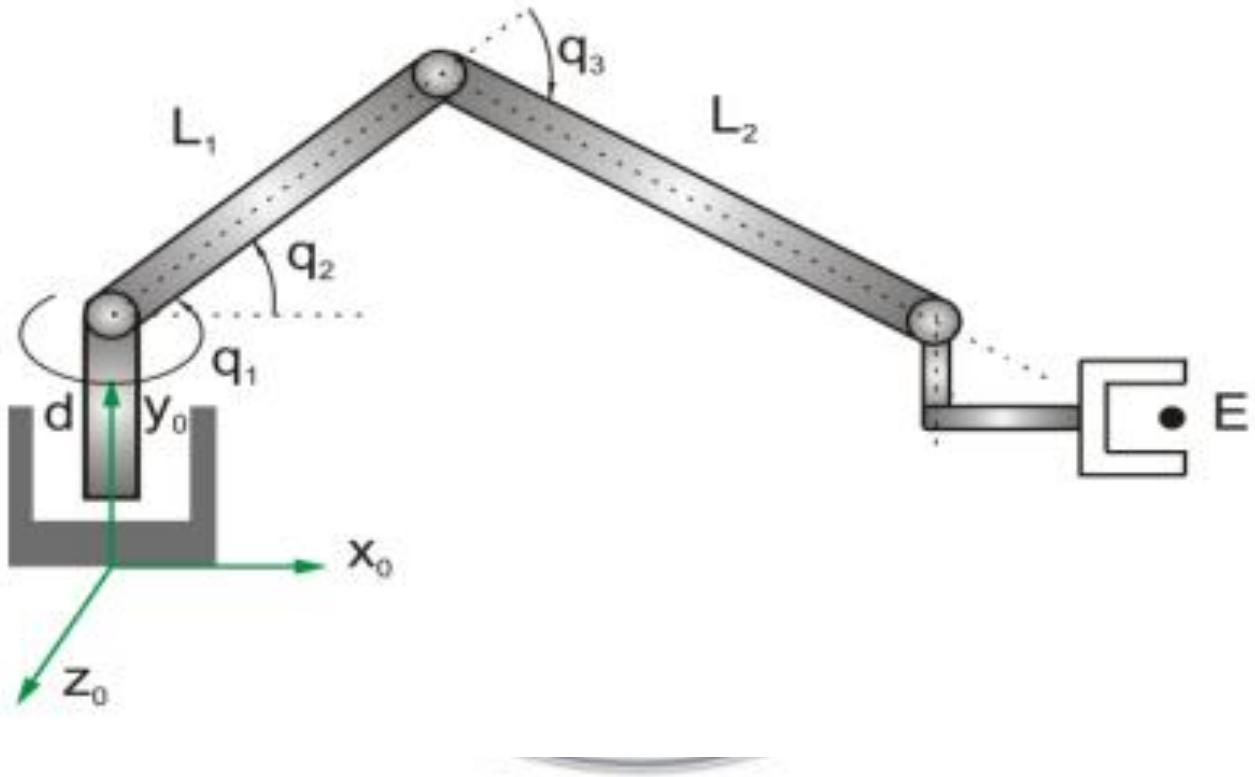

G16_WED

INDEX

- PROJECT OVERVIEW
- TEAM RESPONSIBILITIES
- TIMELINE
- MECHANISM OVERVIEW
- CONCLUSION

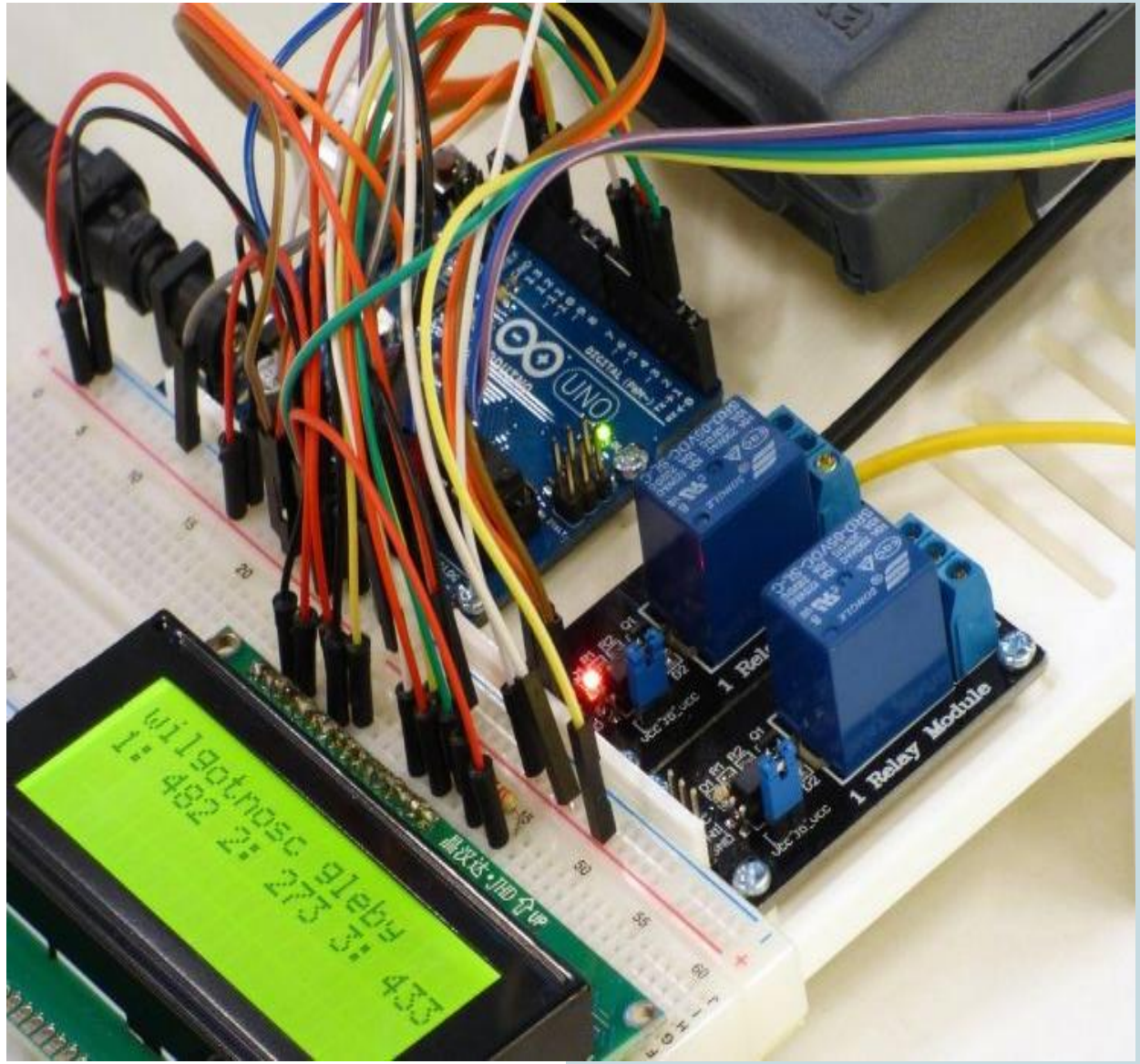

PROJECT OVERVIEW

•**Objective:** This project aims to design and develop a robotic arm that can be controlled via a mobile application over Wi-Fi using an ESP32 microcontroller. The robotic arm will be capable of performing automated tasks such as picking, placing, and gripping objects with precise motion control. The system will incorporate essential electronics, sensors, and communication modules to ensure seamless operation and user-friendly remote control.

•**Working Principle:** It will use ESP32 and servo to Mimic the motion of a hand and the gesture will be transmitted via wifi .

•**Application:** The increasing adoption of robotic arms in manufacturing, healthcare, logistics, and home automation highlights the importance of developing cost-effective and flexible robotic solutions.

TEAM RESPONSIBILITIES

Team Member	Role and Responsibilities
Abhigyan Singh	Select and connect appropriate actuators (servo/stepper motors).
Adarsh Singh	Integrate all components and test the full system.Identify and fix any hardware/software issues.
Aditya Sharma	Develop the interface (joystick, app, or remote control).Implement Bluetooth, Wi-Fi, or RF control if required.
Ayush Singh	Cut, 3D print, or assemble mechanical parts.
Eakamjit Singh Bhela	Design the robotic claw structure (CAD modeling).
Vedant Singh Bedi	Write and upload the control code (Arduino, ESP32, etc.).

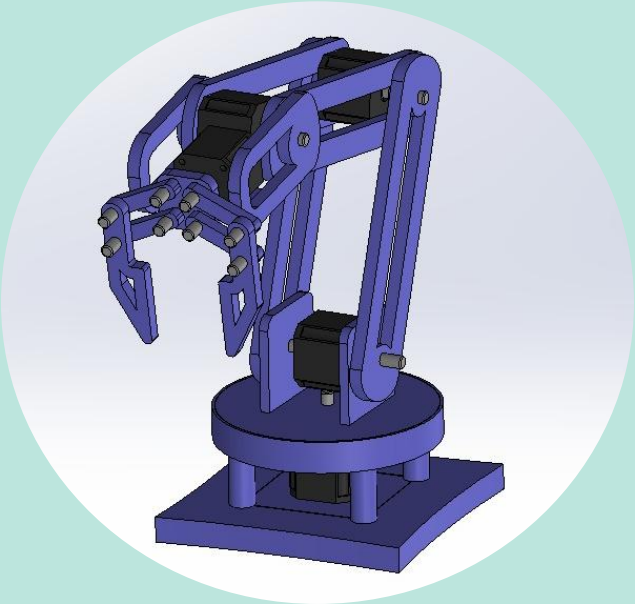

WEEK 1	**(Mechanical Design):** Finalize CAD model and gripping mechanism.
WEEK 2	**(Fabrication & Assembly):** Identify materials and tools needed.
WEEK 3	**(Electronics & Actuation):** Select motors, power supply, and circuit components.
WEEK 4	**(Programming):** Research motor control algorithms and microcontroller selection.
WEEK 5	**(Control System):** Decide on control interface (joystick, app, or remote).
WEEK 6	**(Testing & Documentation):** Set up a shared document for logs and reports.

The project will result in a fully functional robotic claw capable of gripping objects with smooth movement, mechanical stability, and reliable actuation using servo or stepper motors. It will feature an integrated electronics and control system powered by a microcontroller, with properly wired actuators and a control interface via joystick, mobile app, or buttons for real-time response. The system will include optimized software with well-written code for efficient movement, minimal latency, and error handling to ensure smooth and accurate operation. Comprehensive documentation will be provided, including an assembly guide, code documentation, and a final report for troubleshooting, future modifications, and knowledge sharing in the tinkering lab. Additionally, the project will enhance team members' skills in mechanical design, electronics, and programming while improving problem-solving abilities and understanding of robotics, automation, and control systems.

FINAL DESIGN OF ROBOTIC ARM

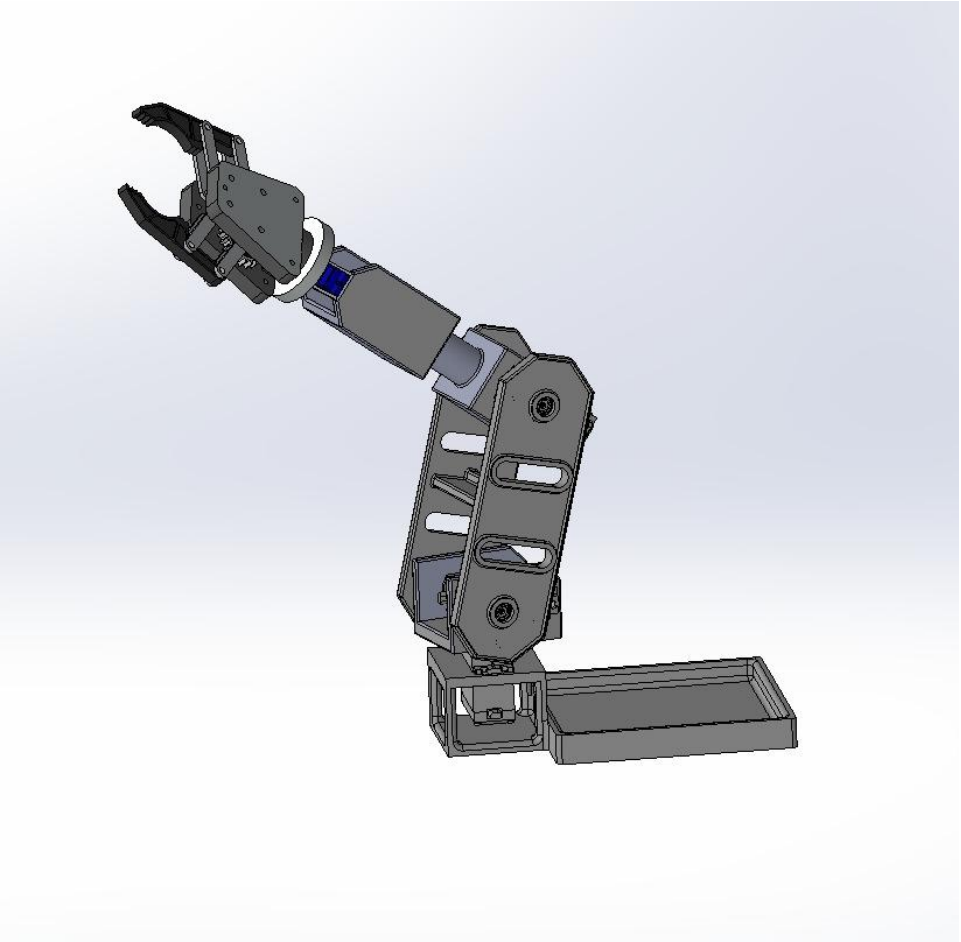

MECHANISM OVERVIEW

1. Base Rotation (DOF 1): A servo motor at the bottom (base) allows the entire arm to rotate left and right.This provides horizontal movement of the arm.
2. Shoulder Joint (DOF 2):A servo motor is mounted at the lower large bracket.This allows the arm to move up and down like a shoulder.It controls the elevation of the entire upper section.
3. Elbow Joint (DOF 3):The middle servo motor provides bending at the elbow.It moves the forearm portion up or down, extending or retracting reach.
4. Gripper (DOF 4):The last servo controls the gripper/claw.It can open and close to grab and release objects.
5. Gripper Rotation (DOF 5)

CURRENT WORK DONE

1. Final 3D design done – sent for 3D printing.
2. All Servo motors and components tested. Initial code for individual control done.
3. 3d printing will take 4-5 days because of complexity. Next step will be assembly of model, including soldering wires to a proto board or breadboard.
4. Forward and Inverse Kinematics for the end manipulator with respect to base to be calculated to perform predefined movements.sa

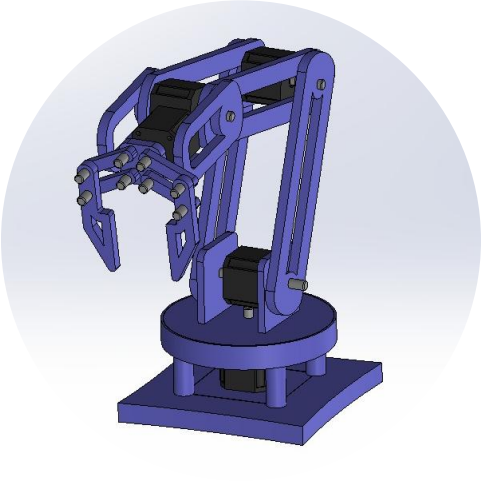

THANK YOU

ABHIGYAN SINGH | ADARSH SINGH | ADITYA SHARMA | AYUSH SINGH| EAKAMJIT SINGH| VEDANT SINGH BEDI